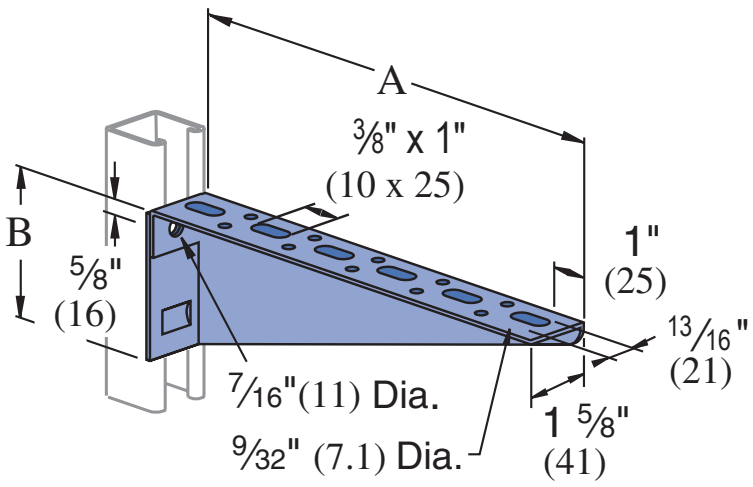
P2494 R-L THRU P2499 R-L



Material : 12 Gauge Steel.
R - As shown; L - Opposite hand

Part Number	Stamped Ident. No.	"A" In *(mm)*	"B" In *(mm)*	Wt/100 pcs Lbs *(kg)*
P2494 R-L	121895 R-L	12 *305*	3 7/16 *87*	152 *68.9*
P2495 R-L	121896 R-L	14 *356*	3 15/16 *100*	173 *78.5*
P2496 R-L	121897 R-L	16 *406*	4 7/16 *113*	223 *101.2*
P2497 R-L	121898 R-L	18 *457*	4 15/16 *125*	266 *120.7*
P2498 R-L	121899 R-L	20 *508*	5 7/16 *138*	308 *139.7*
P2499 R-L	121900 R-L	22 *559*	5 15/16 *151*	355 *161.0*

Vertical Channel Part No.	Gauge	Uniform Design Load Lbs *(kN)*
P1000	12	300 *(1.33)*
P1100	14	250 *(1.11)*
P2000	16	200 *(.89)*

Safety Factor - 2½

Standard Dimensions for 1⅝" (41mm) width series channel fittings *(Unless Otherwise Shown on Drawing)*
Hole Diameter: 9/16" (14mm); Hole Spacing - From End: 13/16" (21mm); Hole Spacing - On Center: 1⅞" (48mm); Width: 1⅝"(41mm); Thickness: ¼" (6mm)
Note : When used for mechanical supports, load capacities of brackets and fittings should be in compliance with the American Standard Code for Pressure Piping.

MATERIAL

Fittings, unless noted, are made from hot-rolled, pickled and oiled steel plates, strip or coil, and conform to ASTM specifications A575, A576, A635, or A36. The fitting steel also meets the physical requirements of ASTM A1011 SS GR 33. The pickling of the steel produces a smooth surface free from scale.

Many fittings are also available in stainless steel, aluminum and fiberglass. Consult factory for ordering information.

FINISHES

Fittings are available in:

Perma-Green III (GR),

Electro-galvanized (EG), conforming to ASTM B633 Type III SC1;

Hot-dipped galvanized (HG), conforming to ASTM A123 or A153 and

Plain (PL).

Project: 1~~~